POWER-FAB®

DPW | SOLAR

PREFORMED LINE PRODUCTS

Module		
Type	Width	Length
D	31-33”	60-67”
E	38-40”	51-53”
F	38-42”	58-62”
G	37-42”	61-67”

Top-of-Pole Mount for 12 Modules (TPM12) For Module Types D, E, F, & G

Assembly Instructions

step-by-step assembly and installation

Version 2, Rev C
PCN 112911-7

Top-of-Pole Mount for 12 Modules (TPM12) For Module Types D, E, F & G

A few words about the product

The TPM12 for module types D, E, F, & G is designed to mount on 8 inch SCH40/80 galvanized steel pipe (installer supplied).

Pipe size and foundation requirements are based on several factors including the array surface area, maximum design wind speed, exposure category, soil type, steepest expected tilt angle, and above-ground clearance.

For general foundation and pipe size recommendations, please see our publication titled "TPM Pipe and Foundation Recommendations".

For foundation and pipe size recommendations on a specific installation, please contact us at:

Phone: 800-260-3792

Email: info@power-fab.com

About these Assembly Instructions

These instructions...

WARNING: Follow the procedures and precautions in these instructions carefully.

- Are intended to be used by individuals with sufficient technical skills for the task. Knowledge and use of hand tools, measuring devices and torque values is also required.
- Include various precautions in the forms of Notes, Cautions, and Warnings. These are to assist in the assembly process and/or to draw attention to the fact that certain assembly steps may be dangerous and could cause serious personal injury and/or damage to components. Following the step-by-step procedures and these precautions should minimize the risk of any personal injury or damage to components while making the installation not only safe but an efficient process.

Required Tools ☑

- ☐ 7/16 inch wrench or socket for 1/4 inch module hardware
- ☐ 9/16 inch wrench or socket for 3/8 inch hardware
- ☐ 3/4 inch wrench or socket for 1/2 inch hardware
- ☐ 1-1/2 inch wrench or socket for 1 inch Pivot Bolt hardware
- ☐ Torque wrench
- ☐ Ratchet wrench
- ☐ Ratchet extension bar
- ☐ 3 to 6 foot level
- ☐ Tape Measure
- ☐ Square

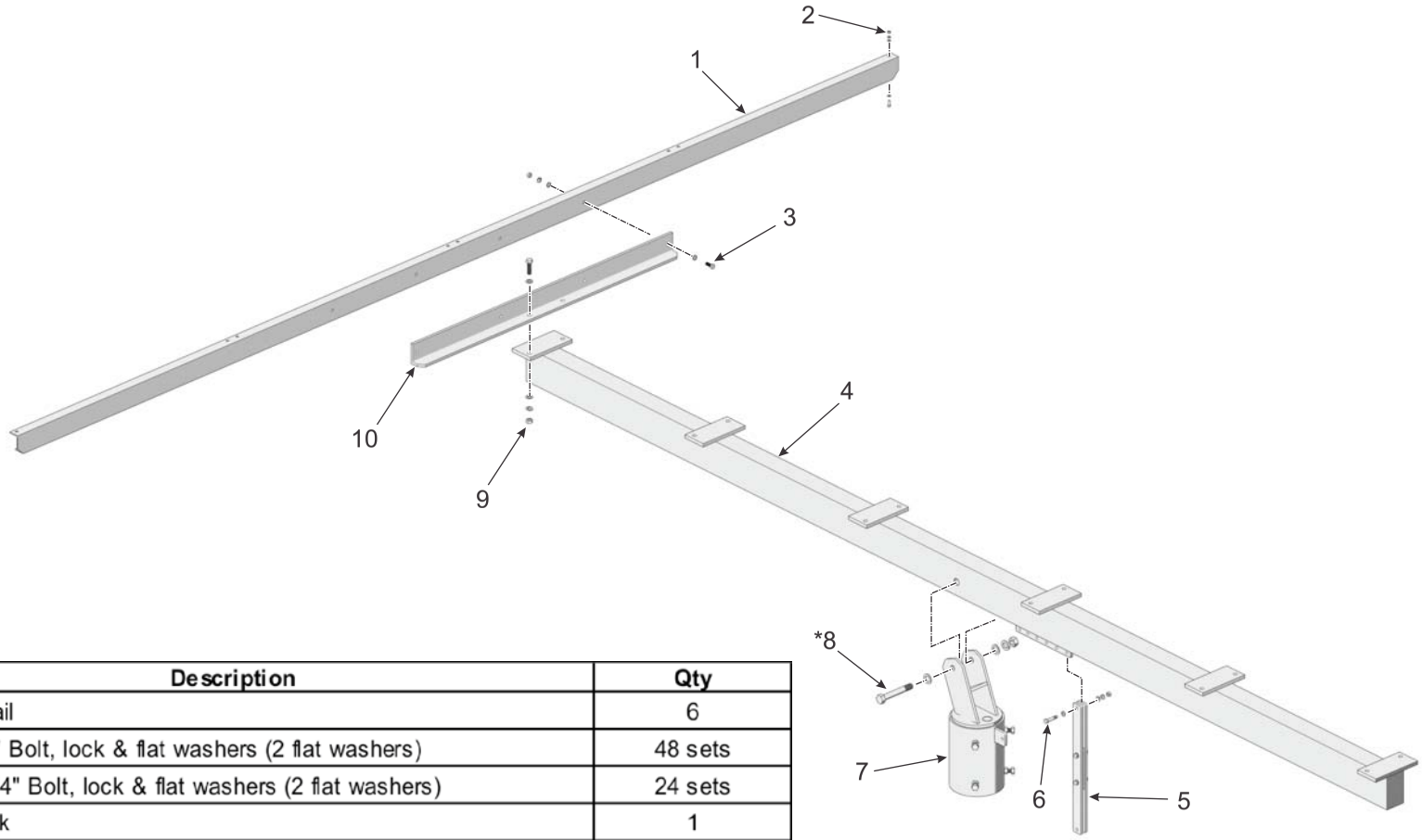

Item	Description	Qty
1	Module Rail	6
2	1/4" x 3/4" Bolt, lock & flat washers (2 flat washers)	48 sets
3	3/8" x 1-1/4" Bolt, lock & flat washers (2 flat washers)	24 sets
4	Strongback	1
5	Support Bar	1
6	1/2" x 1 3/4" Bolt, lock & flat washers (2 flat washers)	2 sets
7	Mounting Sleeve	1
8	1" x 5-1/2" or 6-1/2" Pivot Bolt, lock & flat washers (2 flat washers) *	1 set
9	1/2" x 1 3/4" Bolt, lock & flat washers (2 flat washers)	12 sets
10	Rail Angle	6

* Pivot Bolt length depends on the width of the Strongback width; as such a 3" wide Strongback uses a 5-1/2" Pivot Bolt and a 4" wide Strongback uses a 6-1/2" Pivot Bolt.

Top-of-Pole Mount for 12 Modules for Module Types D, E, F, & G Parts Identification

Step 1: Install the Mounting Sleeve on Vertical Pipe

CAUTION:
Use care while working around the structure during assembly. There could be components that create hazards or obstruct free movement causing serious bodily injury. Many are at head/eye level. Move slowly and with care around the work area.

Before installing the Mounting Sleeve, verify that the Mounting Pole is plumb to the ground and hasn't shifted or leaned while the concrete footing has cured.

The Mounting Sleeve slips on top of the Mounting Pole and has four 1/2” Set Bolts which are used to secure it to the Mounting Pole. (See Figure 1-1)

A. Slip the Mounting Sleeve on top of Mounting Pole and slide it down until it rests/bottoms out on top of Mounting Pole.

B. Rotate the Mounting Sleeve so that the Support Bar Pivot Tab is pointing north and the Strongback Vertical Towers are leaning south.

C. Secure the Mounting Sleeve by tightening the four 1/2” Set Bolts. **Torque each Set Bolt to 55-60 ft.-lbs.**

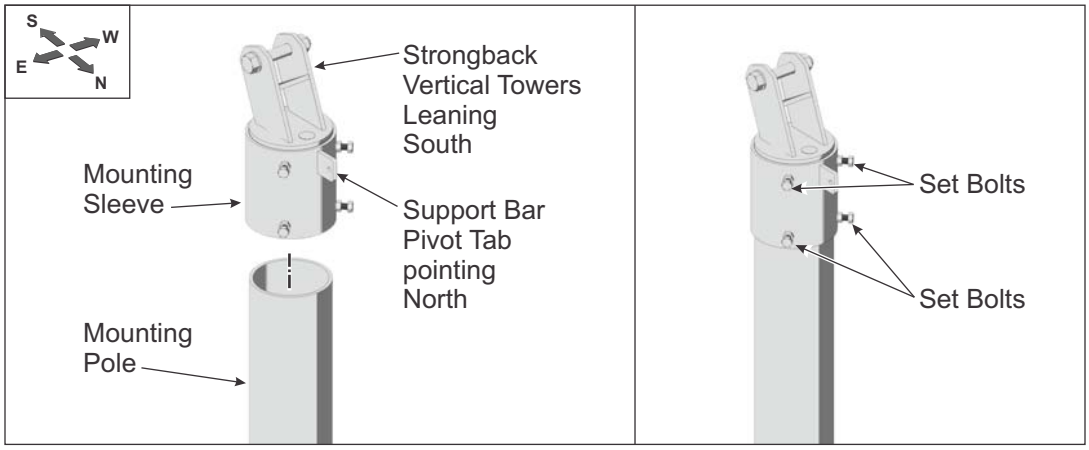

Figure 1-1: Installing the Mounting Sleeve

Step 2: Install the Strongback to the Mounting Sleeve

NOTE:
Although this system offers six elevation set points, for ease of assembly, set the angle to its lowest setting of 15-degrees. Optimum tilt setting of the rack will take place later in these instructions.

The Strongback is attached to the Mounting Sleeve using the Pivot Bolt that passes through its two Vertical Towers and the Support Bar. The support bar is attached to the Strongback on one end and the Support Bar Pivot Tab of the Mounting Sleeve on the other end using 1/2” hardware.

A. Remove the Support Bar from the Strongback and re-install in the 15° elevation set point. Secure with the 1/2” hardware and finger tighten. (See Figure 2-1)

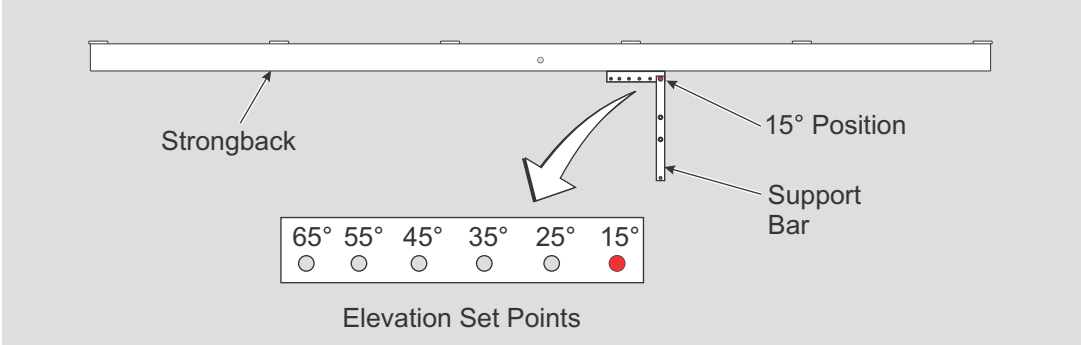

Figure 2-1: Positioning Support Bar

CAUTION:
This is a two person activity. The Strongback must be held in place by one person while the second person aligns it and secures it to the Mounting Sleeve using the Pivot Bolt and the 1" hardware. Failure to do so could lead to serious personal injury.

B. Remove the Pivot Bolt from the Mounting Sleeve and collect the 1/2" x 1-3/4" bolt, flat washers and lock washer needed to secure the Support Bar to its Pivot Tab on the Mounting Sleeve.

C. Orient the Strongback to the Mounting Sleeve with its Lower Support Bar positioned on the same side of the Mounting Sleeve as the Support Bar Pivot Tab.

D. Slide the Strongback between the two vertical mounting tabs, aligning the thru-hole of the Strongback with the holes of the two Vertical Towers.

E. Insert the Pivot Bolt along with one flat washer through the one Vertical Tower and the Strongback exiting the second Vertical Tower on the opposite side. Secure with the remaining flat washer, lock washer and hex nut. For now, finger tighten only to allow movement for the next step.

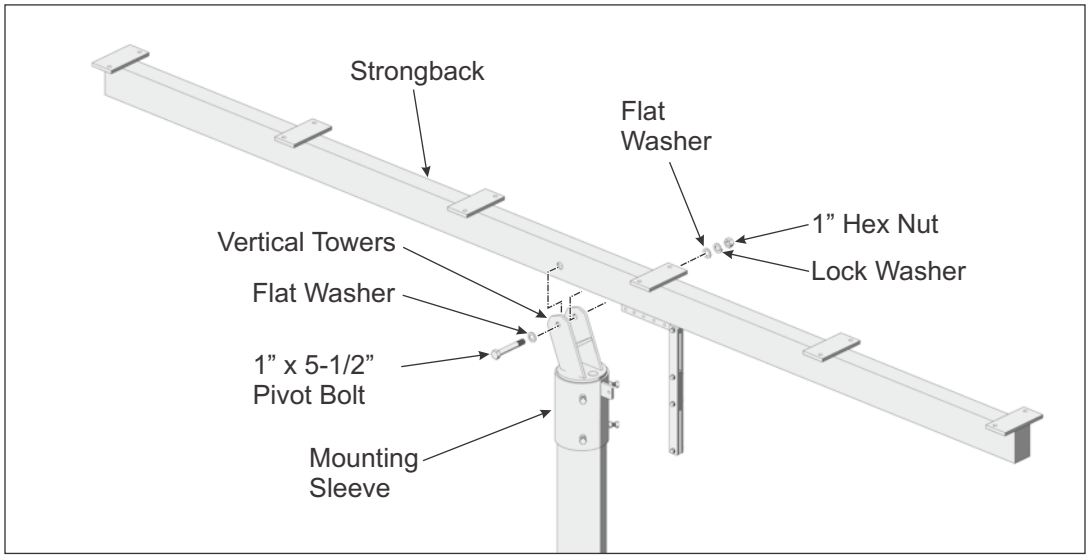

Figure 2-2: Installing the Strongback

F. Pivot the Strongback and the Support Bar to align the mounting holes of the Support Bar with its Pivot Tab on the Mounting Sleeve. Slide the Support Bar over the Pivot Tab. Insert the 1/2" x 1-3/4" bolt and one flat washer thru the Support Bar and Mounting Tab and secure it with the remaining flat washer, lock washer and hex nut. **Torque hardware on both ends of Support Bar at 72-80 ft.-lbs.** (See Figure 2-3)

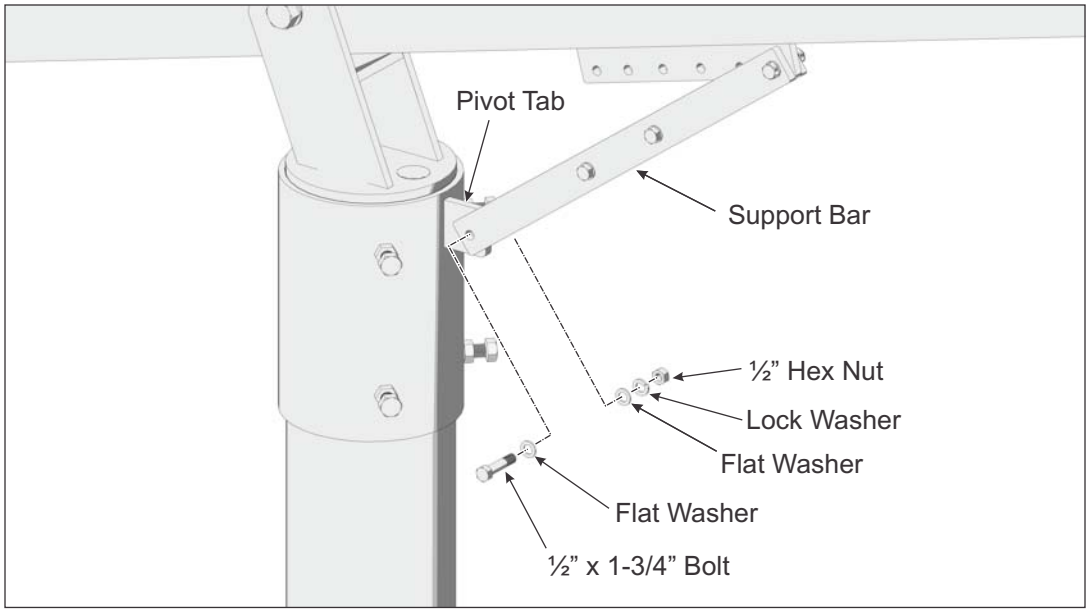

Figure 2-3: Securing Support Bar to Mounting Sleeve

G. Return and tighten the Pivot Bolt. The Pivot Bolt cannot be left loose - the Mounting Sleeve Vertical Towers must be firmly clamped to the sides of the Strongback, eliminating any gaps between the Vertical Towers and the Strongback. **Torque to 200-250 ft.-lbs.** (See Figure 2-4)

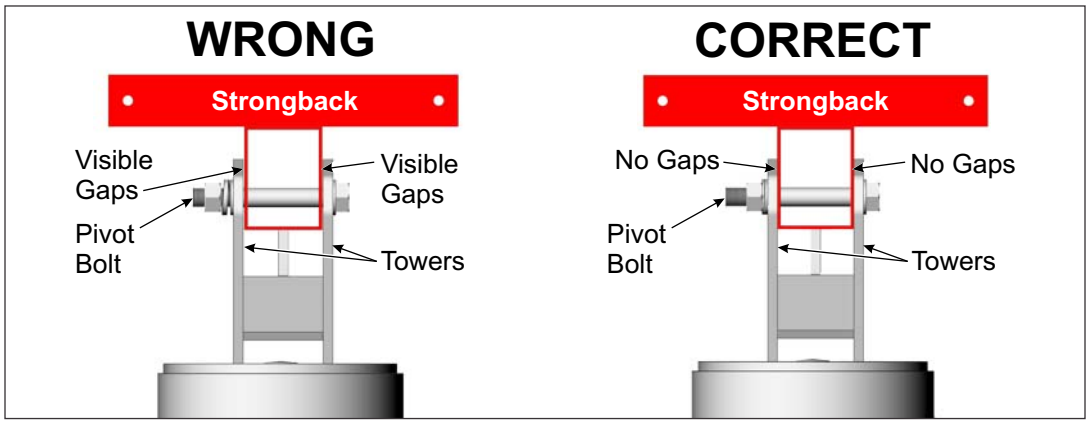

Figure 2-4: Tighten and Torque the Pivot Bolt

Step 3: Install the Rail Angles to the Strongback

NOTE:
Finger-tighten the Rail Angles to the Strongback while installing. After PV Modules are installed, re-tighten to specified torque values.

Rail Angles run in an E-W direction and are secured to the rail plates (welded to the Strongback) using the 1/2” x 1-3/4” bolts and hardware. Proper orientation of the Rail Angles to the Strongback is very important, follow these instructions carefully (see Figures 3-1 & 3-2). There are 6 Rail Angles to install.

A. Referring to Figure 3-1 for orientation of the Rail Angles position the Rail Angle on the Rail Plate of the Strongback and secure with 1/2” x 1-3/4” bolts and hardware. Finger tighten for now. (See also Figure 3-2)

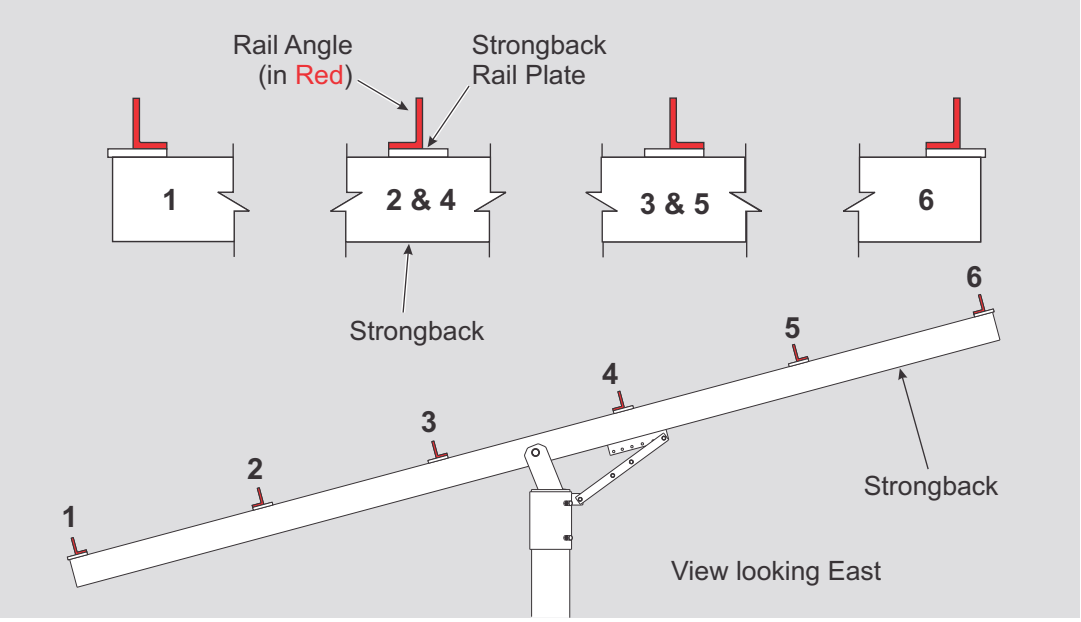

Figure 3-1: Orientation of Rail Angles to Strongback

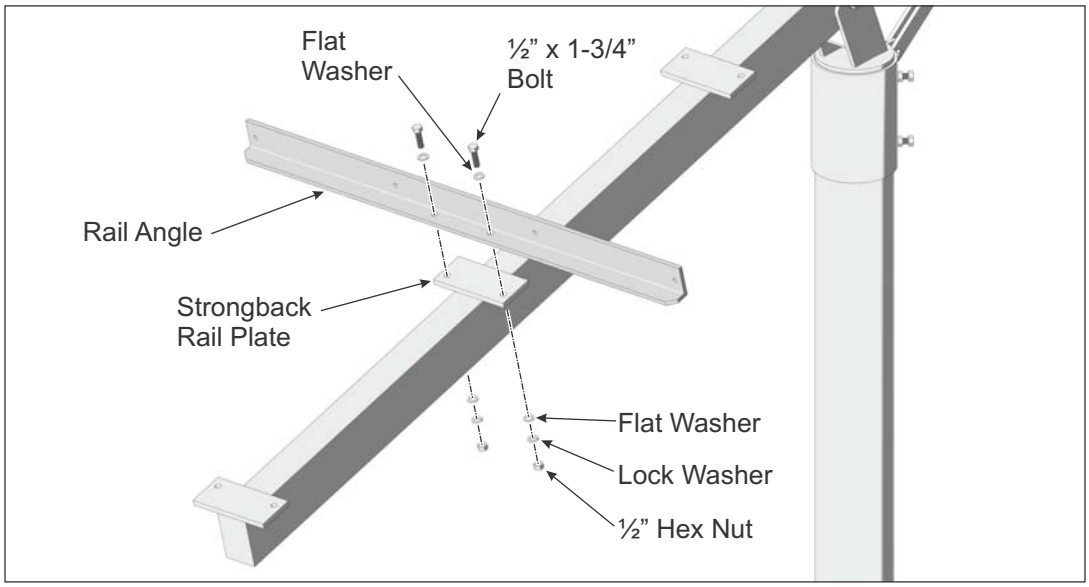

Figure 3-2: Installing Rail Angles to Strongback

Step 4: Install the Module Rails to the Rail Angles

CAUTION:
This is a two person activity. Module Rails are unstable before they are fully secured to the Rail Angles. Module Rails must be held in place by one person while the second person aligns and secures them to the Rail Angles. Failure to do so could lead to serious personal injury.

NOTE:
Be certain that the orientation of the Module Rails to the Rail Angles match these instructions.

Module Rails run in an E-W direction and are secured to the Rail Angles using 3/8" x 1-1/4" bolts and hardware. There are 6 Module Rails to install.

Module Rails must also be properly oriented to the Strongback; if not the PV Modules will not align to the mounting holes of the Module Rails. (See Figure 4-1)

Start by installing the northern Module Rail first and work southward.

A. Referring to Figure 4-1 for orientation of the inboard Module Rails, position the first section of Module Rail (with its angle cut end positioned north) at the northern most position on the Cross-Bars. Align the Module Rail mounting holes with the holes of the Cross-Bar mounting tabs and secure with 3/8" x 1-1/4" bolts and hardware. Finger-tighten for now. (See also Figure 4-2)

B. Continue in this manner installing the five remaining Module Rails.

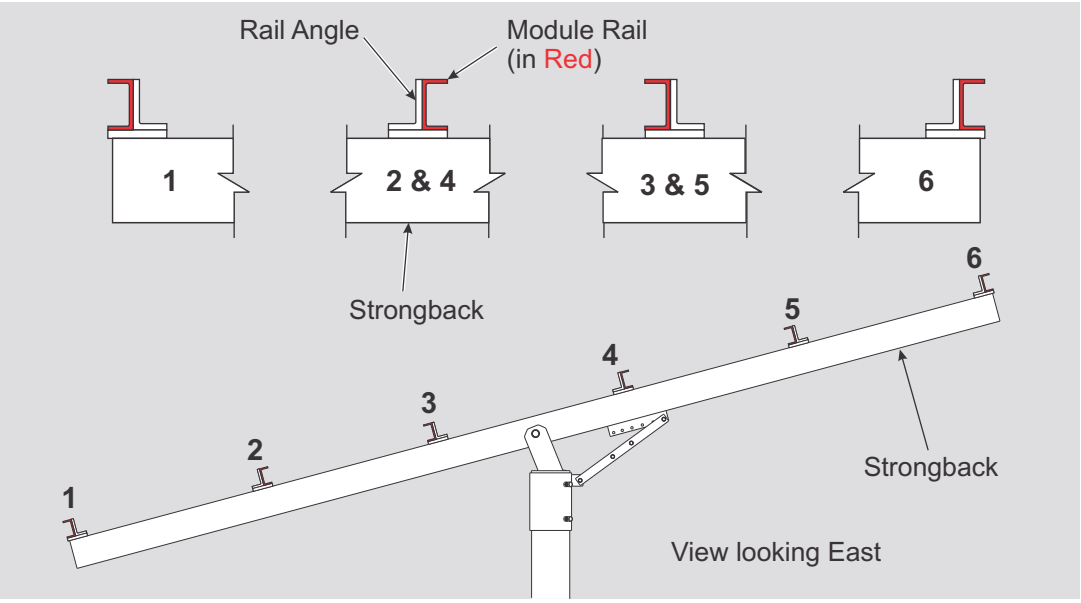

Figure 4-1: Orientation of Module Rails to Strongback

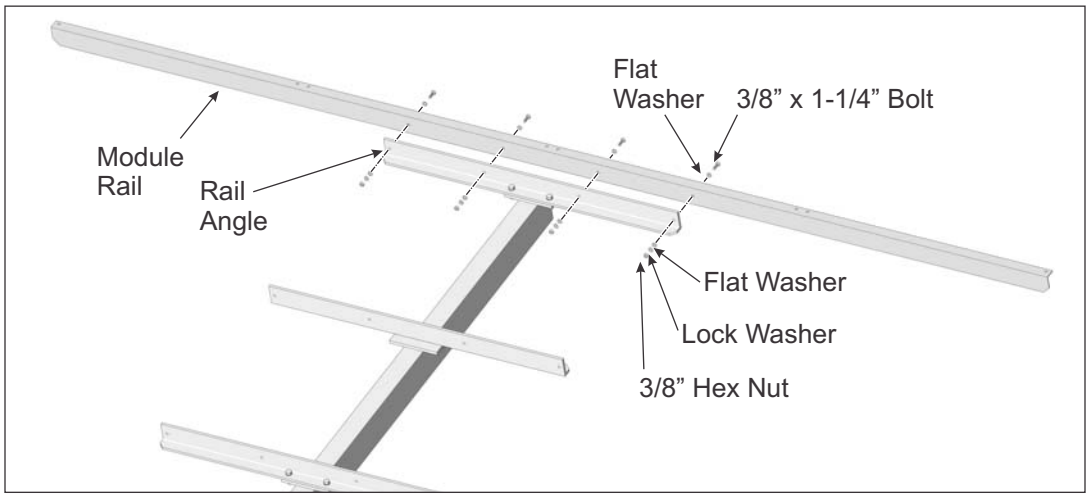

Figure 4-2: Installing Module Rail to Rail Angle

Step 5: Installing PV Modules to Module Rails

CAUTION: This is a two person activity. PV Modules are heavy and unstable before they are fully secured to the Module Rails. PV Modules must be held in place by one person while the second person aligns and secures them to the Module Rails. Failure to do so could lead to serious personal injury and damaged components.

PV Modules are secured to the Module Rails using 1/4” x 3/4” bolts and hardware.

Start with the southern most PV Modules and work in a northern direction. This provides a measure of safety as the previously installed southern Modules can help to hold the next in-line northern Module in place during installation.

A. Place the southern most PV Module in place on the Module Rails. Align the mounting holes and secure with 1/4” x 3/4” bolts and hardware; each Module has four attachment points. Finger-tighten for now. (See Figure 5-1)

B. Continue in this manner to install all southern most PV Modules first and then work in a northern direction installing the remaining Modules.

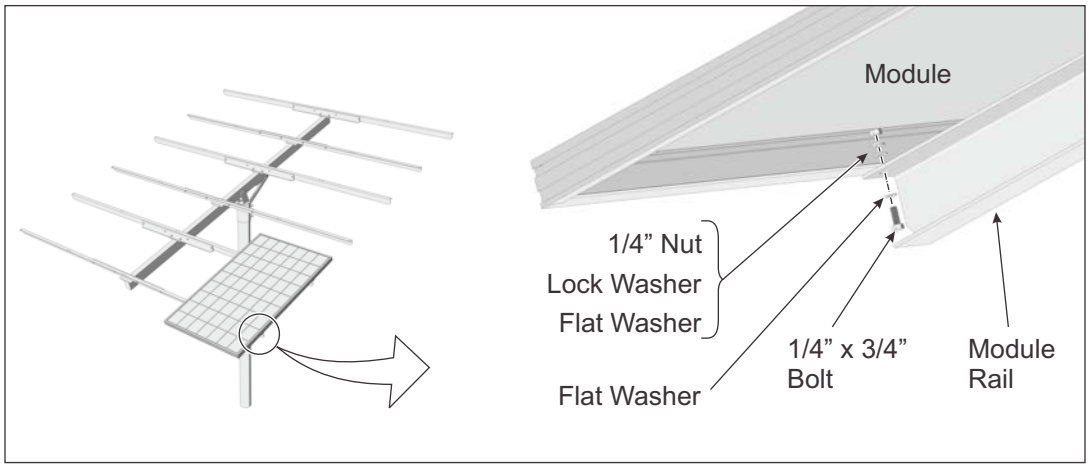

Figure 5-1: Installing PV Modules to Module Rails

Step 6: Now return and tighten mounting hardware.

CAUTION: Be certain to re-tighten all Rail Angle, Module Rail and PV Module mounting hardware and torque to the specified values. Failure to do so could lead to structural failure, damaged components and/or serious personal injury.

A. Return and tighten each set of the 1/2” mounting hardware, securing the Rail Angles to the Rail Plates of the Strongback **Torque all at 72-80 ft.-lbs.**

B. Return and tighten each set of the 3/8” mounting hardware, securing the Module Rails to the Rail Angles. **Torque all at 32-34 ft.-lbs.**

C. Return and tighten each set of 1/4” mounting hardware, securing the PV Modules to the Module rails. **Torque all at 6-8 ft.-lbs.**

Step 7: Adjust the Tilt Angle of the Rack

WARNING:
Do not attempt to remove the Pivot Bolt during tilt adjustments! Removal could lead to serious personal injury or death. Adjustments are made with the Pivot Bolt hardware loosened but in place.

CAUTION:
This is a two person activity. As the Pivot Bolt is loosened and the Support Bar hardware is removed, the rack is heavy and unstable. The rack must be held in place by one person while the second person loosens and removes the hardware and then re-installs/tightens the hardware back in place. Failure to do so could lead to serious personal injury and damaged components.

To adjust the tilt angle, loosen the Pivot Bolt hardware and removing the Support Arm upper hardware attaching the Support Arm to the Strongback. Use great care in this procedure as it can be dangerous if the procedure is not completed as described with a minimum of two people.

A. While one person holds the south edge of rack, the other loosens the Pivot Bolt and removes the upper 1/2” hardware attaching the Support Bar to the Strongback.(See Figure 7-1)

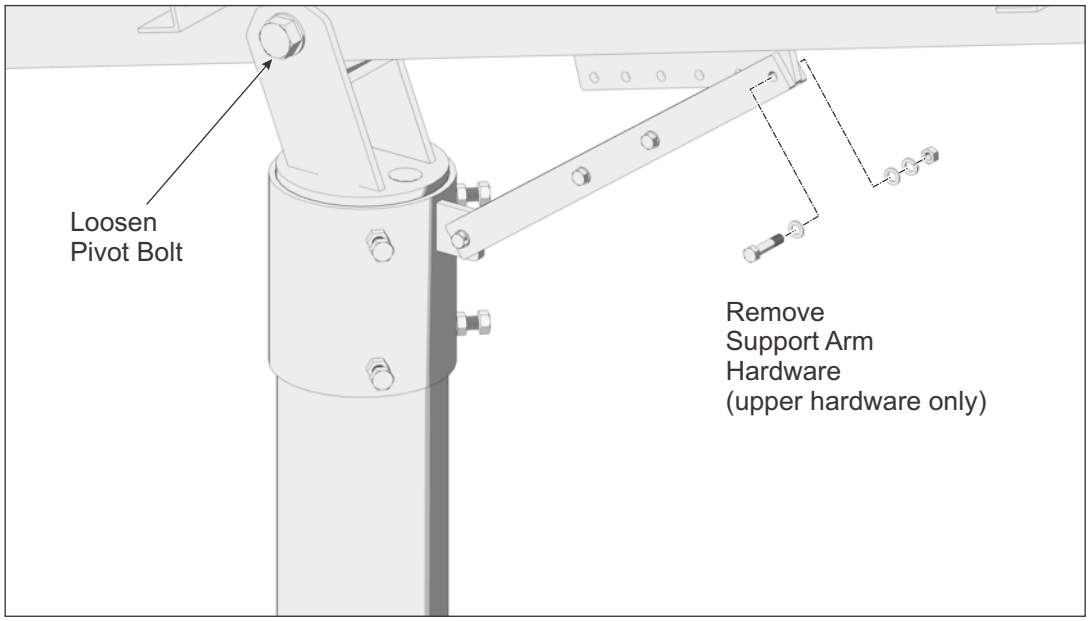

Figure 7-1: Preparing to Adjust the Tilt Angle

B. Tilt the rack to the desired elevation angle (15°, 25°, 35°, 45°, 55°, or 65°) and re-attach the Support Bar to the Strongback placing the 1/2” hardware in the appropriate hole matching the desired elevation. **Torque to 72-80 ft.-lbs.** (See Figure 7-2)

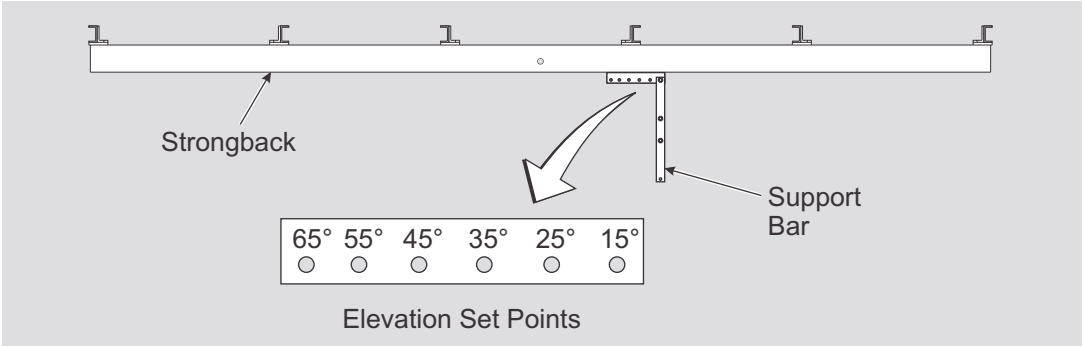

Figure 7-2: Setting the Tilt Angle

(continued on next page)

C. Re-Tighten the Pivot Bolt. After changing the tilt angle and tightening the Support Bar hardware, the Pivot Bolt must be re-tightened. The Pivot Bolt cannot be left loose - the Mounting Sleeve Vertical Towers must be firmly clamped to the sides of the Strongback, eliminating any gaps between the Vertical Towers and the Strongback. **Torque to 200-250 ft.-lbs.** (See Figure 7-3)

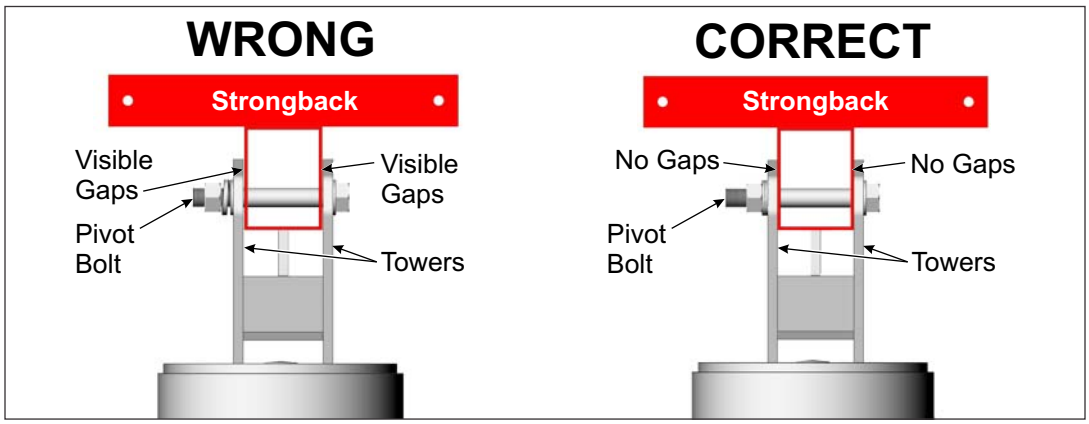

Figure 7-3: Tighten and Torque the Pivot Bolt

4000-B Vassar Drive NE
Albuquerque, New Mexico 87107
USA

Telephone: 800.260.3792
Fax: 505.889.3548
Web Site: www.DPWSolar.com
E-mail: info@power-fab.com

© 2012 Preformed Line Products
PCN 112911-7
Version 2, Rev C